DF-05037-2

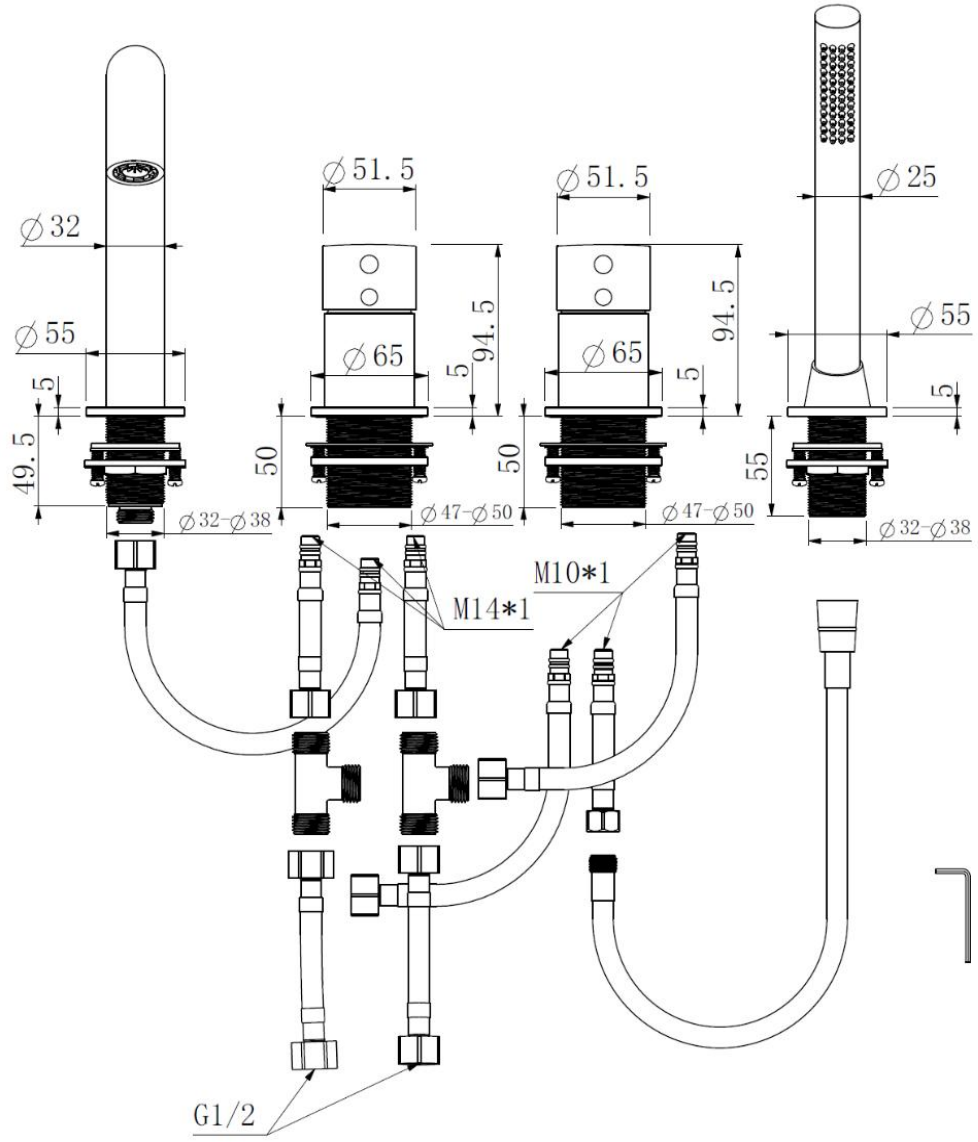
∅32
∅55
5
49.5
∅51.5
∅65
5
94.5
50
∅32-∅38
∅47-∅50
∅51.5
∅65
5
94.5
50
∅47-∅50
∅25
∅55
5
55
∅32-∅38
M14*1
M10*1
G1/2

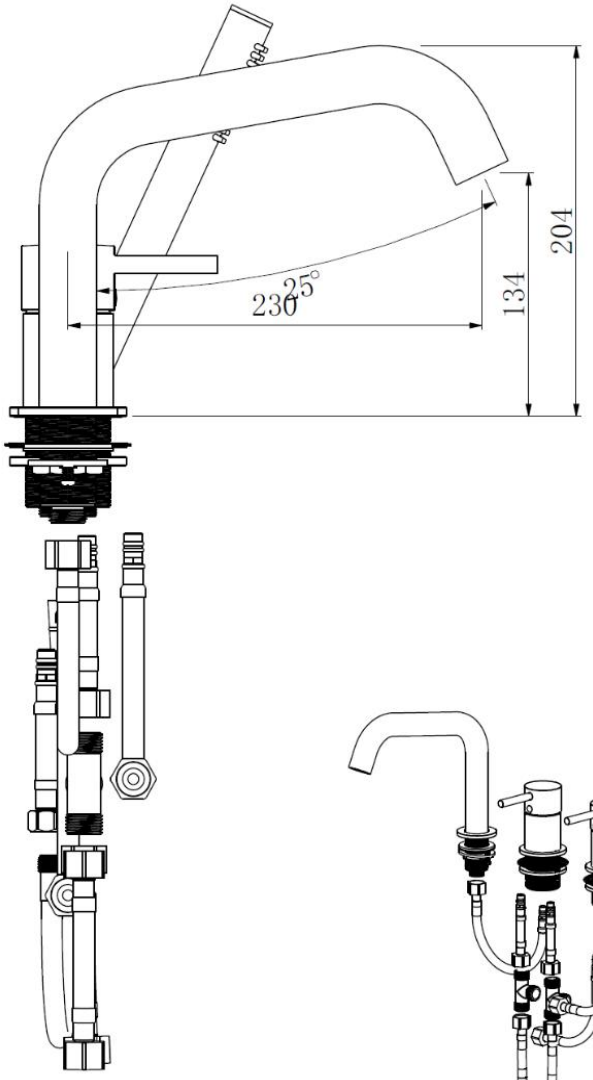
204
134
230
25°